ARES Soiling Measurement System

Installation Manual

ARES CS5 using cellular mode / Wash Extension V4

Revision **B**

Release date: May 11, 2026

1.0 Important Safety Instructions

WARNING: TO PREVENT FIRE, ELECTRIC SHOCK AND DAMAGE, DO NOT EXPOSE THE INTERNAL COMPONENTS (CIRCUITS BOARDS AND WIRES) TO RAIN OR MOISTURE.

Please be aware of the safety instructions below:

1. Read these instructions.
2. Keep these instructions.
3. Follow all instructions.
4. Do not submerge the device(s) in water or liquid.
5. Do not install the ARES device directly on solar module frames.
6. Do not leave the ARES device powered on without sun (like indoors) for more than 24 hours. The battery will fully discharge and may take more than 2 hours with full sun to recharge.
7. Never leave the Wash Extension solar panel glass facing down for an extended period of time.
8. Clean solar panel glass only with a damp microfiber cloth.
9. Tighten fasteners only as specified in this manual.
10. Do not pinch or sharply bend the flex plumbing tube. Doing so will result in inefficient spray and possible pump failure.
11. Do not install next to heat sources such as inverters.
12. Do not connect any other solar panel to the Wash Extension other than the one supplied.
13. Consult Fracsun when any doubt or questions arise regarding equipment installation.
14. Refer all equipment servicing to qualified service personnel or Fracsun Inc.

2.0 Device Overview

The ARES Soiling Measurement System accurately measures the instantaneous and daily soiling loss percentage by comparing the light generated current difference between two identical reference cells. The ARES device contains a "clean" reference cell which is cleaned daily while the "dirty" reference cell is left to naturally soil. ARES is an Internet of Things (IoT) device and outputs data over a 3G or 4G/LTE cellular network. In it's default cellular configuration, ARES is powered by the sun and does not require external power, making it deployable in virtually any location with a cellular signal.

Figure 2-1: ARES soiling sensor

Accompanying the ARES device is the Wash Extension device, which automates the washing events and provides feedback. The Wash Extension device can detect successful wash events, low tank level, low battery, high humidity, and freezing conditions. ARES can be used without the Wash Extension device if it is manually washed at fixed intervals.

2.1 Modbus RS-485 Notes

If a cellular network is not available or you prefer to connect directly to an onsite SCADA or datalogger, ARES and Wash Extension devices can function as Modbus RS-485 server devices and stream data to a client device. However, a Modbus-only communication is **not always recommended** because of the *loss of additional processing* performed in the Fracsun cloud (like daily soiling/insolation calculations, wash optimization schedules, and financials). The most flexible option is to forward SCADA-retrieved data to the Fracsun cloud using our Inbound API. To connect via Modbus, please review the Modbus Documentation on the website.

3.0 Box contents

The ARES soiling measurement system is shipped in two boxes. The following contents are in each box:

3.1 ARES box

ARES CS5 Soiling Measurement Device **1x**	External cellular whip antenna (SMA connection) **1x**	Flex tubing, 3 meters, 1/8" ID, ¼" OD (pre-attached to ARES) **1x**

3.2 Wash Extension box

Gen4 Wash Extension device (solar panel attached) **1x**	Bottom support bracket (attached to Wash Extension) **1x** 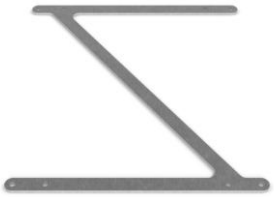	M12 communication cable, RS-485, 3 meters **1x**
Corrugated sheathing, 3 meters **1x**	Hardware Kit **1x** **4x** Threaded ground spike **4x** 3/8"-16 x 1" hex head screw **3x** Zip ties **1x** Hose compression sleeve	

4.0 Tools required

The following tools are required to install the ARES and Wash Extension devices.

Electric screwdriver	PH2 bit	11/32" wrench	1/2" wrench **	5/32" hex key **	5/16" hex socket driver *	7/16" wrench *

* Required for Purlin Bracket Kit

** Required for HSAT Bracket Kit

5.0 Selecting a device location

5.1 Where to install

Measuring soiling is a new area of study for solar asset owners and operations teams. Every solar plant has a unique soiling profile based on several environmental factors like dominant wind direction, agricultural activity, dirt roads, mowing operations, pollen, wildfire ash, and air pollution. Knowing where to install soiling measurement stations, like ARES, is a not a well-studied field and there is no single location that will capture an accurate soiling model of the entire array. For this reason, it is beneficial to have multiple measurement locations within an array field to capture non-uniform soiling phenomena and improve statistical significance of the soiling loss data.

The key is to install at locations on the array that are *representative* of the entire system, or the specific area that you are studying. The pins in the image below show potential locations of ARES devices across a solar plant.

Figure 5-1: Potential ARES device locations across an entire solar plant.

5.1.1 Uniform or non-uniform soiling

Every site has a unique soiling profile. Often, due to local site conditions, soiling levels throughout a single array can vary greatly. By creating measurement zones within a single array, the ARES device can empower a team to focus on areas of highest soiling first.

5.1.2 Placement on the array

To generate a representative soiling loss value, the ARES device must be installed adjacent to the array in the same tilt and orientation as the modules themselves. This is achieved by attaching the ARES unit to a structural component of the racking system. This can be a torque tube, Z-purlin, aluminum module rack or any other member that matches the array tilt. It is ideal to install the ARES hardware while the array is clean to achieve a matching baseline. This can be achieved after a significant rain even or an array cleaning. If neither of these are possible nor convenient, the ARES unit can be installed while taking note that the soiling loss measurement will not match. The daily accumulated soiling loss (soiling rate) can still be used in the Fracsun portal to calculate an estimate of current soiling loss at the site by extrapolating back to the most recent cleaning event.

5.2 Cellular signal

Depending on your model, ARES will operate on either a 3G or LTE CAT-M1 network. ARES must have decent signal strength to successfully connect to a nearby cellular tower and communicate with the Fracsun cloud. A site survey is *highly* recommended before installation.

5.2.1 Site survey

There are several ways to perform a site survey for the best cellular connectivity. The most convenient way is to use a smart phone on a AT&T or T-Mobile network. Verizon uses a different carrier frequency, therefore will not work for performing a site survey. An Android phone is recommended to perform the site survey if available. Apple devices have a built-in "Field Test" mode that allows you to see the signal strength, which may or may not work on certain iPhone versions. Apps on Android devices have many options, like selecting the carrier frequency (3G or 4G/LTE) and visualizing the signal level on a gauge or a chart.

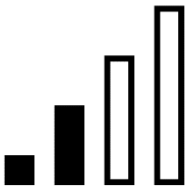

- Android devices: open the Play Store and download any of the following apps:
  - *Network Cell Info Lite* by M2Catalyst, LLC.
  - *Signal Strength* by Lakshman
- Apple devices: Open the call dialer and type in: *3001#12345#* to enter Field Test mode.
  - Go to the "Serving Cell Measurements" page to view the Measured RSSI.

5.2.2 Signal strength

The device's signal strength is in a "healthy" range when the RSSI is greater than -100 dBm (the closer to 0, the stronger the signal). The signal quality, which measures relative noise in the connection, should be greater than 35% (the closer to 100%, the better the quality). Both signal strength and quality impact the health of the connection. For example, a site survey measuring an RSSI of -92 dBm at 45% quality would be "Fair" for the 3G band and "Good" for the LTE CAT-M1 band, making it a good candidate for an install location.

3G Signal RSSI	3G Signal Quality
-70 dBm and greater	Excellent
-70 dBm to -85 dBm	Good
-86 dBm to -100 dBm	Fair
Less than -101 dBm	Poor

LTE CAT-M1 Signal RSSI	LTE Signal Quality
-90 dBm and greater	Excellent
-90 dBm to -105 dBm	Good
-106 dBm to -120 dBm	Fair
Less than -120 dBm	Poor

If the signal level cannot be measured, one can observe the download speed using an App like **Ookla Speedtest** to determine if the signal quality is sufficient for installation at that prospective location. A general rule of thumb is if you are achieving good download/upload speeds at the prospective location in the array, then it's probably okay to install.

6.0 Preparing the ARES device before mounting

6.1.1 Automatic wake in the sun

ARES devices are shipped in a deep-sleep mode state, which preserves the battery for up to 45 days while in the box. When placed in the sunlight (specifically greater than 250 W/m^2), ARES will wake from deep-sleep within 15 minutes (sometimes less) and start connecting to the nearest cellular tower. Once a connection is established, ARES will begin normal operation.

This feature allows ARES to startup without opening the unit and connecting the internal battery. Just place ARES in the sun, and it will power up.

6.1.2 Low battery

If more than 45 days has passed, the battery may be in a low-power state. If this occurs, give ARES at least 20 minutes in full sun (or 40 minutes with clouds) to recharge the battery. Once the battery is at a nominal level, ARES will automatically wake (if in the sun) and begin normal operation.

7.0 Mounting ARES to the array

Due to every array having unique mounting specifications, Fracsun has developed two universal mounts that will work for most tracking and fixed systems. The bottom of the ARES device contains six ¼-20 threaded inserts that can be utilized to mount ARES in various methods if the universal mount will not fit your application. The following examples explain how to mount ARES using the universal mounting hardware. If your team requires assistance designing outside this hardware's capabilities, please feel free to reach out to the Fracsun team.

7.1 Tracker torque tube using HSAT Bracket Kit

For the most representative measurement on a horizontal single axis tracking (HSAT) site, mounting ARES on an available section of exposed torque tube is the best method. The HSAT Bracket Kit contains the hardware listed below. To mount ARES to the torque tube, follow these instructions:

1. Determine the torque tube diameter and insert the threaded rod into the corresponding holes on the bottom of the bracket.
2. Mount the bracket to the bottom of the ARES device using the (2) ¼-20 x ½" flat head (with patch) screws at approximately 10 in-lbs. See Figure 7-1.
3. Place the ARES unit and the bracket on top of the torque tube, ensuring it is parallel to the plane of the modules.
4. Secure the bracket in place by attaching the strut below the torque tube and securing with (2) each of the 5/16" fender washer, locking washer and hex nut. See Figure 7-2.

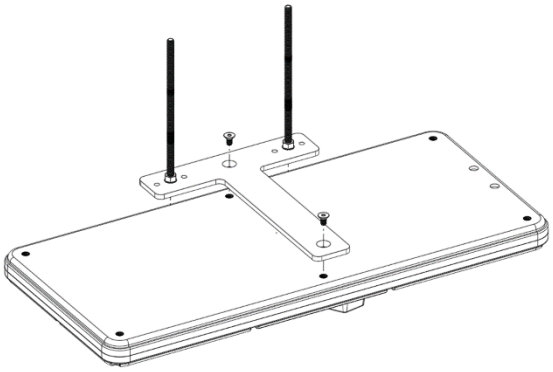

Figure 7-1: Securing the HSAT bracket to the bottom of ARES.

HSAT bracket hardware list:

- (1) HSAT Bracket
- (2) 1/4-20 x ½" flat head screw
- (2) 5/16-18 threaded rod with locking nuts
- (1) 9” length shallow strut channel
- (2) 5/16” fender washers
- (2) 5/16” locking washers
- (2) 5/16”-18 hex nut

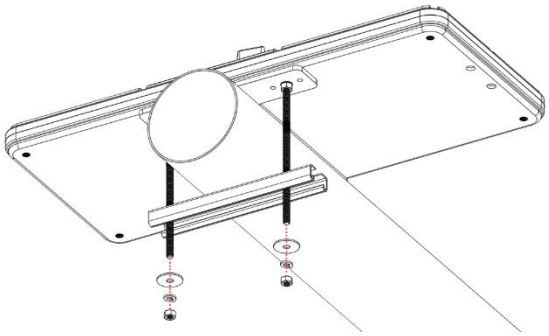

Figure 7-2: Mounting ARES to the torque tube (not shown).

7.2 Fixed-tilt system using Purlin Bracket Kit

For fixed tilt systems, the Purlin Bracket Kit (PBK) is attached to a purlin or rail. ARES then mounts directly to this rail if there is no correction needed to ensure the measurement plane is parallel to that of the array. The Purlin Bracket Kit contains the hardware listed at the bottom of this section and is installed in the following steps:

1. Mount the angle bar to the racking using the self-tapping screws provided. Ensure that the ARES mounting holes are aligned to the edge of the module so that the ARES unit sits flush to the module edge.

   Note: the height from the top of module to the top of the bracket should measure 1.4”

2. Mount the ARES device using the ¼-20 button head screws to the bracket at approximately 10 in-lbs torque. See Figure 7-3.

Hardware list:

- (1) 18” Aluminum angle bar
- (2) #12 x 1” hex head self-tapping screw, stainless steel
- (2) 1/4-20 x 1/2" bolts
- (2) 1/4” fender washers
- (2) 1/4” split-lock washers

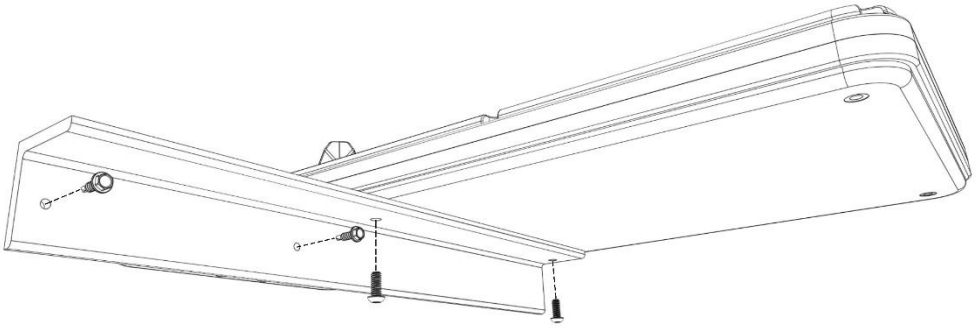

Figure 7-3: Mounting ARES to a purlin or rail using the Purlin Bracket Kit

8.0 External connections

8.1 SMA antenna connection

A gold-plated SMA RF connector is located on the bottom-side of ARES. The supplied cellular di-pole whip blade antenna must be threaded onto the SMA connector to send/receive cellular data. *If the antenna is not connected, ARES will not output data or functional properly.*

The antenna is omni-directional with uniform power in all directions. The optimum antenna orientation is *straight (not bent)* for highest signal power and quality, as seen in Figure 8-1.

Note: If the SMA connector is not there, an internal antenna is attached inside ARES.

Figure 8-1: Blade antenna oriented straight and connected to SMA connector

8.2 M12 connection

The M12 circular receptacle is located on the bottom-side of ARES. This connection is normally used to connect the ARES and Wash Extension devices together for internal communication purposes. If a Wash Extension was supplied with your ARES device, connect the supplied M12 cable assembly between the two devices.

Orient and insert the cable into the M12 receptacle and gently rotate the metal ring until locked in place. ***Do not overtighten***.

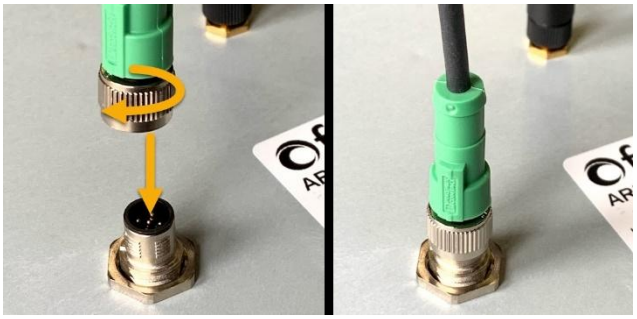

Figure 8-2: M12 circular connection on the ARES botom side

8.3 (Optional) Modbus RTU master / datalogger / SCADA system

By default, the ARES device is configured as a self-powered IoT cellular device, without any external Modbus RTU connection required. The device turns on, takes a few measurements, sends the data to the cloud, and then goes into a low-power sleep state to maintain optimal battery voltage.

8.3.1 Modbus-only mode

When a more robust Modbus connection is required, a different mode (Modbus-only mode) can be enabled. Modbus-only mode turns off the internal cellular modem and disables all mobile connectivity. This mode is helpful in locations without cellular signal or mandatory NERC compliance. Modbus-only mode will bypass the low-power sleep state and cellular cloud functions, but the microcontroller will always remain ON to be available for Modbus polling.

Please contact Fracsun to learn more about connecting ARES to a Modbus RTU master, datalogger, or SCADA system.

9.0 ARES LED Status

The ARES CS5 product is equipped with an external RGB LED that serves as a visual indicator of its status. The LED can output different colors, each representing a specific state or condition. Understanding the meaning of these colors is important for monitoring and troubleshooting the product, this section provides a clear and concise guide to interpreting the LED colors and their associated statuses. Whether you're setting up the ARES product for the first time or need to diagnose an issue, the table below will help you quickly identify the current status of the product based on the color of the LED.

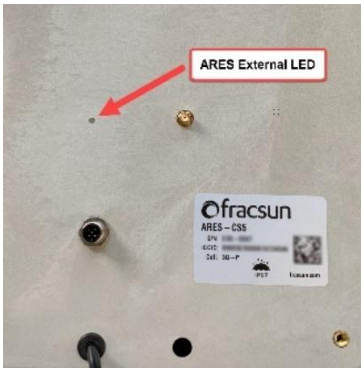

Figure 9-1: ARES external LED location

9.1 Initial setup

The External RGB LED may remain off during the initial setup of the ARES product until the internal battery is charged to a minimum operating voltage. Adequate sunlight exposure is recommended to charge the battery.

9.2 LED color and status (Cellular-only mode)

Below is a table that describes the various LED colors, behaviors, and the associated status. This table applies to ARES devices in Cellular mode only.

LED behavior - color	LED	Status	Time on
Blinking - Green		Trying to connect to cellular tower	10 sec - 5 min
Blinking / Slow pulsing - Aqua		Connect / connected to Fracsun cloud	5 – 10 sec
Blinking - Orange		Listening for Modbus polls from Wash Extension	3 sec
Solid - Orange		Successful Modbus poll from Wash Extension	1 sec
Slow pulsing - Green		Taking a measurement.	3 sec
Slow pulsing – White		Processing code.	varies
Off		Sleeping or Off. In the default mode, the device will go to sleep for 2 minutes to save battery power.	
Blinking / slow pulsing – Magenta		Upgrading firmware / Device OS.	varies

9.3 LED color and status (Modbus-only mode)

Below is a table that describes the various LED colors, behaviors, and the associated status. This table applies to ARES devices in Modbus-only mode.

LED behavior - color	LED	Status	Time on
Blinking - Orange		Listening for polls from Modbus client	Indefinitely
Solid - Orange		Successful poll from Modbus client	1 sec
Slow pulsing - Green		Taking a measurement.	3 sec
Slow pulsing – White		Processing code.	varies
Fast pulsing - Green		Auto-normalization process is currently running.	90 sec
Off		Sleeping or powered off. If night-sleep mode is enabled, the device will sleep for ~10 minutes and turn back on to check for sunlight.	
Blinking / slow pulsing – Magenta		Upgrading firmware / Device OS.	varies

10.0 Wash Extension Installation

10.1 Rinsing fluid

10.1.1 Fluid type

The wash extension can hold up to 16 gallons of rinsing fluid. The fluids list below are highly recommended for high soiling accuracy. Under no circumstances should tap water be used. Tap water contains minerals that will build up on the solar glass after each wash, affecting the irradiance measurement and soiling accuracy.

- Distilled water
- Filtered water (RO + DI preferred) with a TDS (total dissolved solids) value of less than 10 ppm

10.1.2 Number of days

Each rinse uses roughly 5 ounces of water per spray, allowing for about 360 rinses. A future firmware update to ARES devices will disable rinse events on rainy days, reducing the tank refill frequency.

10.1.3 Low tank alert

A liquid level sensor is installed inside the 16 gallon tank. When the sensor is triggered, a “low tank alert” is sent to the Fracsun cloud and you will receive an update via Email and the Web Portal. You will have approximately 60 days to refill the tank before it is completely dry. If rinsing does not occur, the soiling accuracy will be in jeopardy.

10.2 Where to install the Wash Extension

Install the Wash Extension on the ground or roof adjacent to the ARES hardware. The unit includes 3 meters of flex tubing and communication cabling for this purpose.

10.2.1 Placement & Wiring

- **Service Loop**: Create a service loop in the cabling and tubing to prevent water from running down the lines and into the enclosure connections.
- **Proximity**: Ensure the installation site is within the 3-meter reach of the provided hardware.

10.2.2 Solar Panel Orientation

Install the 20W solar panel at the optimum angle for maximum exposure:

- **Single-Axis Trackers** (Northern Hemisphere): Mount facing south.
- **Fixed-Tilt Systems**: Align in the same direction as the existing solar modules.
- **Shading**: Avoid locations with potential seasonal shading (trees, structures, or rows) to ensure full sun exposure year-round.

10.2.3 Ground application using the bottom support bracket

If installed into dirt, the threaded ground spikes will both lift the Wash Extension above the ground and allow leveling of the unit. If the ground is soft enough the bracket can be attached first and the whole unit can be pressed into the ground and leveled while assembled, from the top. If the soil is compact and difficult to drive into, the bracket can be *gently hammered* into place and leveled before placing the tank on top.

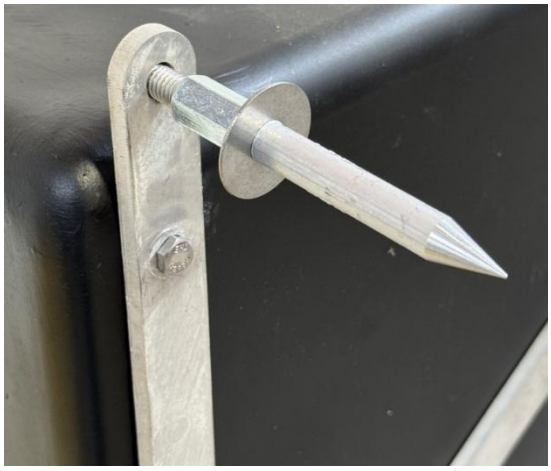

Figure 10-2-1: Installing the ground spikes on the bottom support Z-bracket.

Figure 10-2-2: Wash Extension Z-bracket and ground spikes installed.

10.2.4 Roof application

For roof mounted systems, leave the mounting bracket off and place the Wash Extension directly on the roof thereby spreading the weight more evenly. Use of slip sheets is recommended to prevent unwanted wear to the roof membrane.

The net weight of the Wash Extension is 161 pounds when full and has a contact area of 1.92 ft^2. The equates to a structural roof dead load of 83.85 psf. This can be mitigated by partially filling the tank, though this will require more refilling than the designed annual schedule. Always ensure that the loading capacity of the roof will meet the demands of the Wash Extension.

Figure 10-2-3 ARES and Wash Extension self-ballasted with angelus blocks.

10.3 Removing the solar panel

To continue with installation, the solar panel must be removed to gain access to the Wash Extension enclosure cover, M12 connection, and pump output barb. Remove the 4 nylon thumb screws (2 per side) as seen in Figure 10-4 and set the solar panel aside.

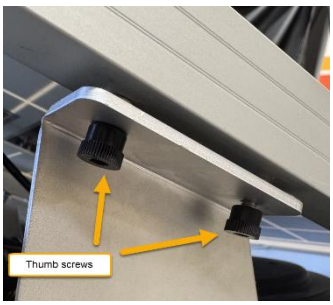

Figure 10-3-1: Remove the solar panel by removing these thumb screws.

10.4 Connecting the flex tubing and communication cable *(very important!)*

To enable the daily automatic cleaning and feedback, the included flex tubing and M12 communication cable must be connected between the Wash Extension and ARES device.
Note: When routing flex tube and cabling, uncoil both to avoid any kinks.

Figure 10-3-2: Brass compression sleeve

1. Carefully route the flex tubing from ARES to the Wash Extension. By default, the tube is attached to the *ARES unit*.
2. Insert the compression sleeve onto the Wash-Extension end of the tube. This sleeve must be connected before installing the tube onto the barb.
3. Push the tube onto the barb, ensuring full coverage over the barb.
4. Move the compression sleeve up the tube and over the barb. Use a 11/32" wrench to tighten the sleeve in a clock-wise direction until secure. See Figure 10--2 which shows a tight connection.
5. Connect the M12 communication cable to the Wash Extension using the following steps:
    a. Fully insert the connector into the receptacle in the proper orientation. See Figure 10-1.
    b. Rotate the metal bayonet ring clockwise until it locks. See Figure 10-2.
6. If not already performed, connect the M12 communication cable to the ARES device following the same steps above to secure the cable.
7. Wrap the provided 3 meter corrugated sheathing around both the flex tube and communication cable. Gently tighten zip ties at the start and end of the corrugated sheathing. See Figure 10-3.

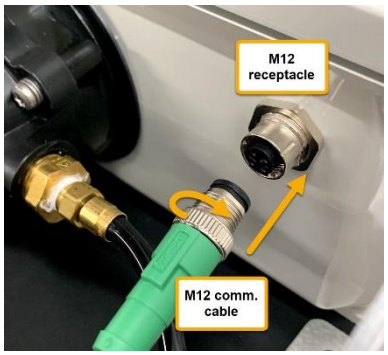

Figure 10-1: M12 cable and receptacle before connection

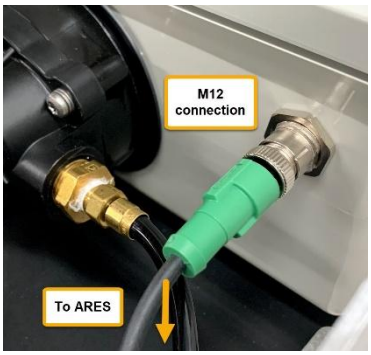

Figure 10-2: Locked M12 cable inside receptacle. Cable and tube go to ARES

Figure 10-3: Corrugated sheathing covering M12 cable and tubing

10.5 Opening the electronics enclosure and powering up for the first time

The battery inside the Wash Extension enclosure is shipped disconnected to avoid over-discharge. The enclosure must be opened to reconnect the battery and power-up the Wash Extension Control (WEC) PCB.

1. Loosen the 4 Phillips-head screws from the top of the Wash Extension enclosure cover.
2. Remove the cover and set aside.
3. Connect the loose Faston connector into the battery terminal as seen in Figure 10-7.
4. Verify that the LED (Figure 10-8) activity on the WEC PCB has the following order:
    a. **Fading white**: processing code (~ 5 sec)
    b. **Rapidly flashing orange**: connecting to ARES (5 sec – 6 min)
    c. **Solid orange**: successfully connected to ARES (3 sec, which you may miss if you blink!)
    d. **Fading aqua**: standby mode (2-5 min, communication was successful if you see this)

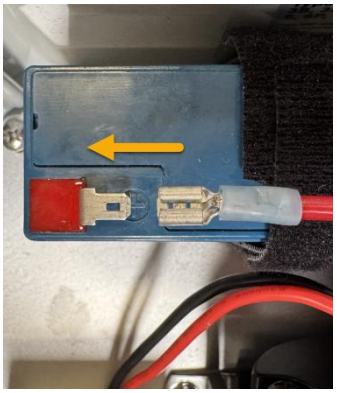

Figure 10-4: Battery connection on Wash Extension

Processing code	Connecting to ARES via Modbus	Successful connection	Failed connection (will try again)	Standby mode + connection good	Low battery voltage
Fading white	Flashing orange	Solid orange (3 seconds)	Fading magenta (3 seconds)	Fading aqua	Fading red (5 seconds)

Do not seal up the electronics enclosure just yet…we need to prime and test the pump before doing so.

Important: The M12 communication cable must be securely connected between the ARES and Wash Extension devices. If this connection is not properly established, or if the ARES device is not currently connected to the cellular network and cloud, the LED will not transition to a fading aqua color. Without this successful sync, automated washing will not trigger, and feedback data will not be transmitted to the Fracsun cloud.

If the LED fades magenta for 3 seconds (after flashing orange), wait another 5 minutes. The first attempt doesn't always connect. The WEC PCB will retry 3 times before ultimately failing, going into standby, and then repeating the connection/syncing process again.

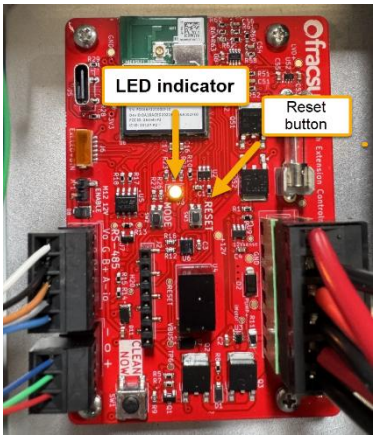

Figure 10-5: LED indicator on the WEC PCB

10.6 Filling the tank, priming the pump, and testing a wash

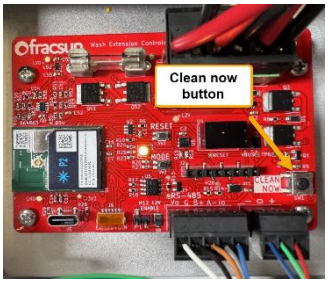

Figure 10-6: Manually test the pump with this button

1. Rotate/remove the tank cap.
2. Fill the tank with rinsing fluid described on Page 9.
3. Locate the small button on the Wash Extension PCB labeled "CLN NOW" as seen in Figure 10-9.
   Note: Ensure that any overspray from the nozzles will not enter the Wash Extension electronics enclosure. If there is a chance of water entering the enclosure, place a towel over the top of the enclosure while you press the button.
4. Press and hold the button until the pump self-primes and the nozzles successfully spray.
5. Keep holding the button until the spray pressure reaches a maximum level, then release it. As air exits the plumbing line, the spray pressure will increase.
6. Top-off the tank with extra rinsing fluid (if needed) and screw the tank cap back on.

10.7 Reinstalling the enclosure cover and rotating solar panel in place

1. Fasten the 4 Phillips head screws to seal the cover onto the enclosure as seen in Figure 10-10.

Figure 10-7: Enclosure cover screws

10.8 Reinstalling and connecting the solar panel

1. Connect the two-pin connectors together as seen in Figure 10-11. Listen for a latching sound. Gently pull on the connectors to confirm the connection is secure.
2. Align the holes in the solar panel to the threads of the mounting brackets as seen in Figure 10-12.
3. Hand-tighten the 4 Phillips head screws. *Do not over-tighten.*
4. Carefully tuck away the solar panel's cable underneath the panel.

Figure 10-8: 2-pin connector

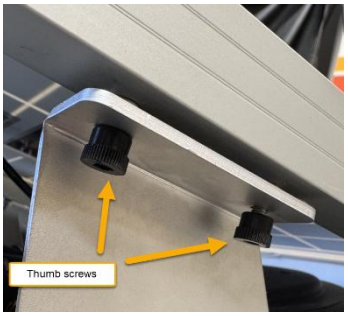

Figure 10-9: Hand-tighten the machine screws to secure the panel to the bracket.

11.0 Finalizing the installation

Solar is often located in extremely rugged environments, therefore it's important to "tidy up" the soiling station before leaving the site. Following these simple steps will protect the equipment from damage and reduce the number of maintenance events over the life of the soiling station.

11.1 Zip ties and strain relief

Follow these simple tips to protect the station:

- Add zip ties to both ends of the corrugated sheathing – near the ARES and Wash Extension connections – approximately 3-5" from the connectors.
- Add strain relief to the corrugated sheathing near the ARES side. Coil the corrugated sheathing in 1-3 loops and attach to a rigid structure using zip ties.
- Do not allow the corrugated sheathing to lay directly on the ground, as weed abatement tools could cut the tube or cable.
- In environments with grazing sheep or other animals, consider adding a small fence around the Wash Extension so the animals don't knock it over.

Figure 11-1: Zip ties in various locations for strain relief and protection

Note: Never over-tighten the zip ties, as doing so could restrict water flow in the flex tubing.

11.2 Completed installation

The image showcases a completed ARES installation:

12.0 Dimensions

Drawings not to scale. For dimensional use only.

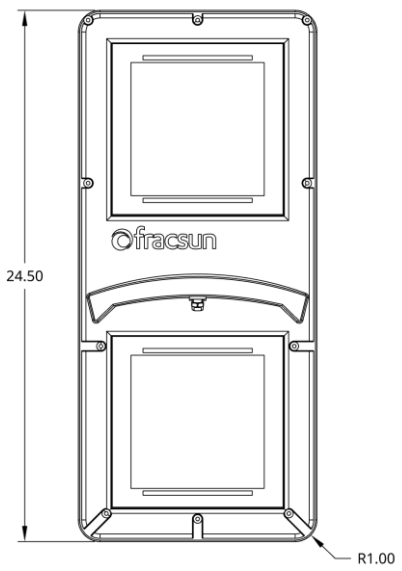

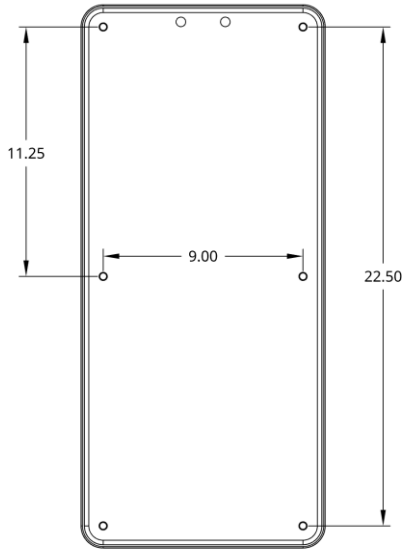

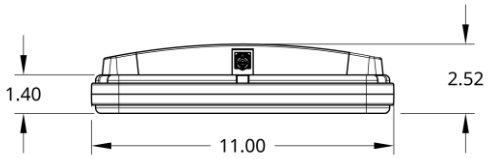

Fracsun Inc.

San Luis Obispo, California, USA

Web: www.fracsun.com

Email: info@fracsun.com

Phone: 805-242-3722